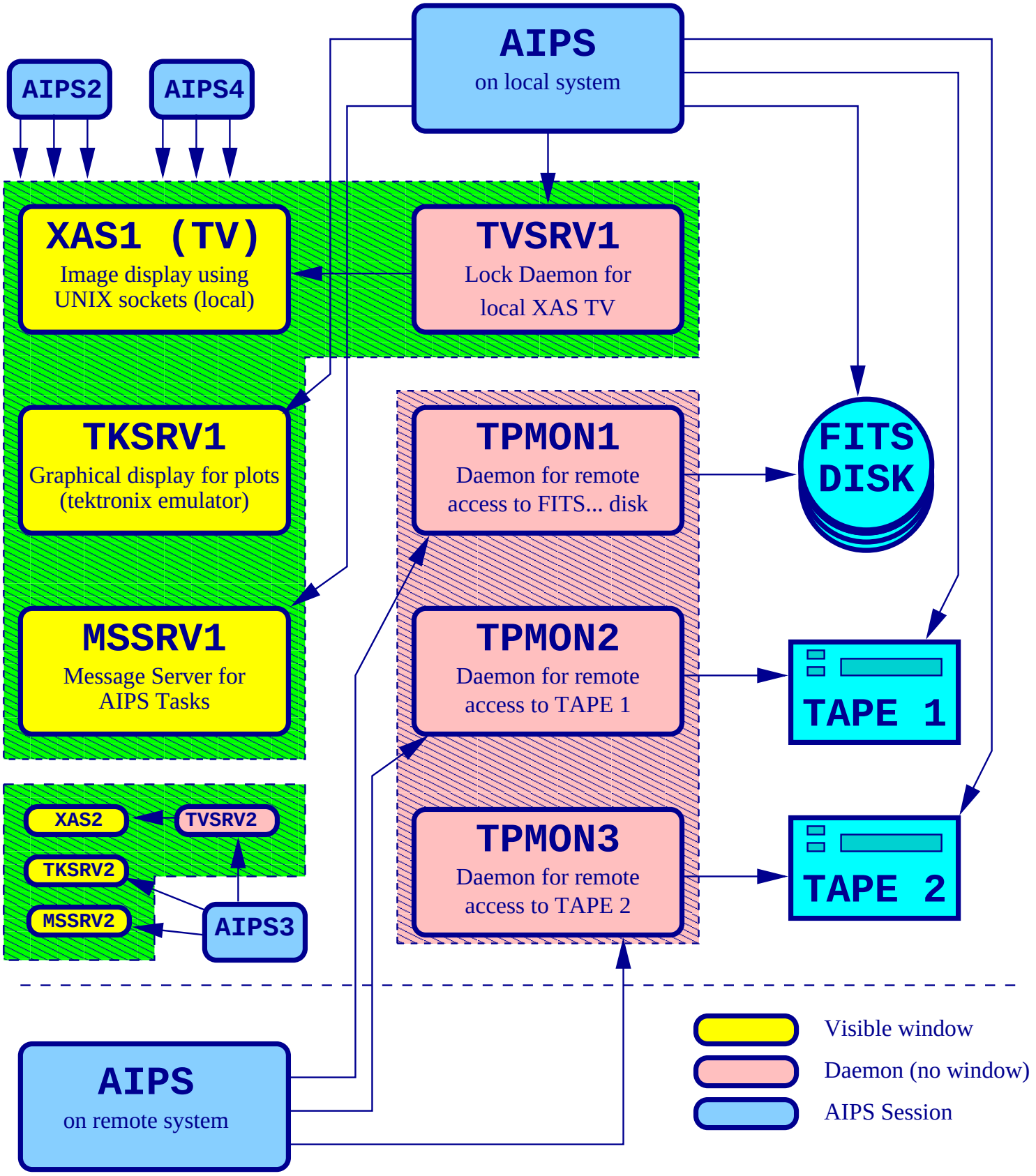
AIPS
on local system
AIPS2
AIPS4
XAS1 (TV)
Image display using
UNIX sockets (local)
TVSRV1
Lock Daemon for
local XAS TV
TKSRV1
Graphical display for plots
(tektronix emulator)
MSSRV1
Message Server for
AIPS Tasks
TPMON1
Daemon for remote
access to FITS... disk
FITS
DISK
TPMON2
Daemon for remote
access to TAPE 1
TAPE 1
TPMON3
Daemon for remote
access to TAPE 2
TAPE 2
XAS2
TVSRV2
TKSRV2
MSSRV2
AIPS3
AIPS
on remote system
Visible window
Daemon (no window)
AIPS Session